EL SERIES
INSTALLATION INSTRUCTIONS
Restrictor Orifice Coils

These instructions must be read and understood completely before attempting installation.

It is important that the Blower and Duct System be properly sized to allow the system to operate at full capacity. Poorly designed systems will not give satisfactory cooling or economy. They may even shorten the service life of the compressor in the outdoor unit.

WARNING

ELECTRICAL SHOCK HAZARD

Failure to follow saftey warnings exactly could result in serious injury, death and/or property damage.

Before Adjusting Blower Speed Shut Off Electric Power To The Furnace Or Blower Module.

Application Note:

When this coil is used in a heat pump application with electric heat, the coil **MUST** be installed upstream of the electric heat. **See Figure 1.**

When this coil is installed with a Heat Pump in conjunction with a fossil fuel heating system a Fossil Fuel Kit **MUST** be used.

CAUTION

UNIT or PROPERTY DAMAGE HAZARD

A field-fabricated auxiliary drain pan, with a drain pipe to the outside of the building, is required in all installations over a finished living space that may be damaged by overflow from the main drain pan.

Converting Horizontal Coil to Right Hand Application (See Figure 2)

1. Remove front coil access panel and tubing plate and carefully pull Coil/Horizontal Drain Pan Assembly out of cabinet.
2. Separate horizontal drain pan from A-Coil drain pan. Remove the two drain plugs from the rear drain holes and install them in the front two drain holes.
3. Remove the turbo plate/turbo plate channel assembly from the left side of the coil assembly. Reinstall on the right side of coil assembly.
4. Rotate drain pan 180° so that the two drain fittings (now plugged) that were in the front are now in the rear. The unplugged holes will now be in the front. Place the A-Coil drain pan into the horizontal pan.
5. Remove the coil support bracket from the right side of the cabinet and reinstall bracket on the left side of the cabinet.
6. Slide the A-Coil/horizontal drain pan assembly into the cabinet being careful not to tear the insulation.

   NOTE: Be sure A-Coil pan slides into the flange of the support bracket on the left side of the cabinet. The support bracket fit holds the A-Coil drain pan in place when it's put into the horizontal position. **Plug all drain holes in the A-Coil pan and the horizontal pan that are not being used to keep airflow from escaping through the holes.**
7. Install the front coil access panel and tubing plate.

Figure 1 | **Coil / Electric Heat Positioning**

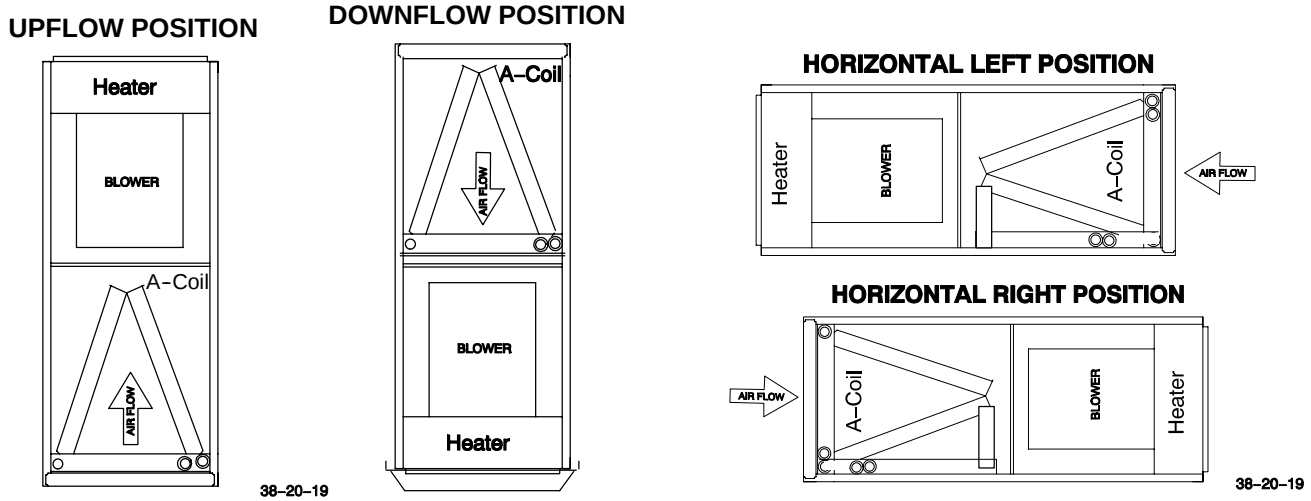

Figure 2 Converting From Left Air Flow to Right Air Flow Operation

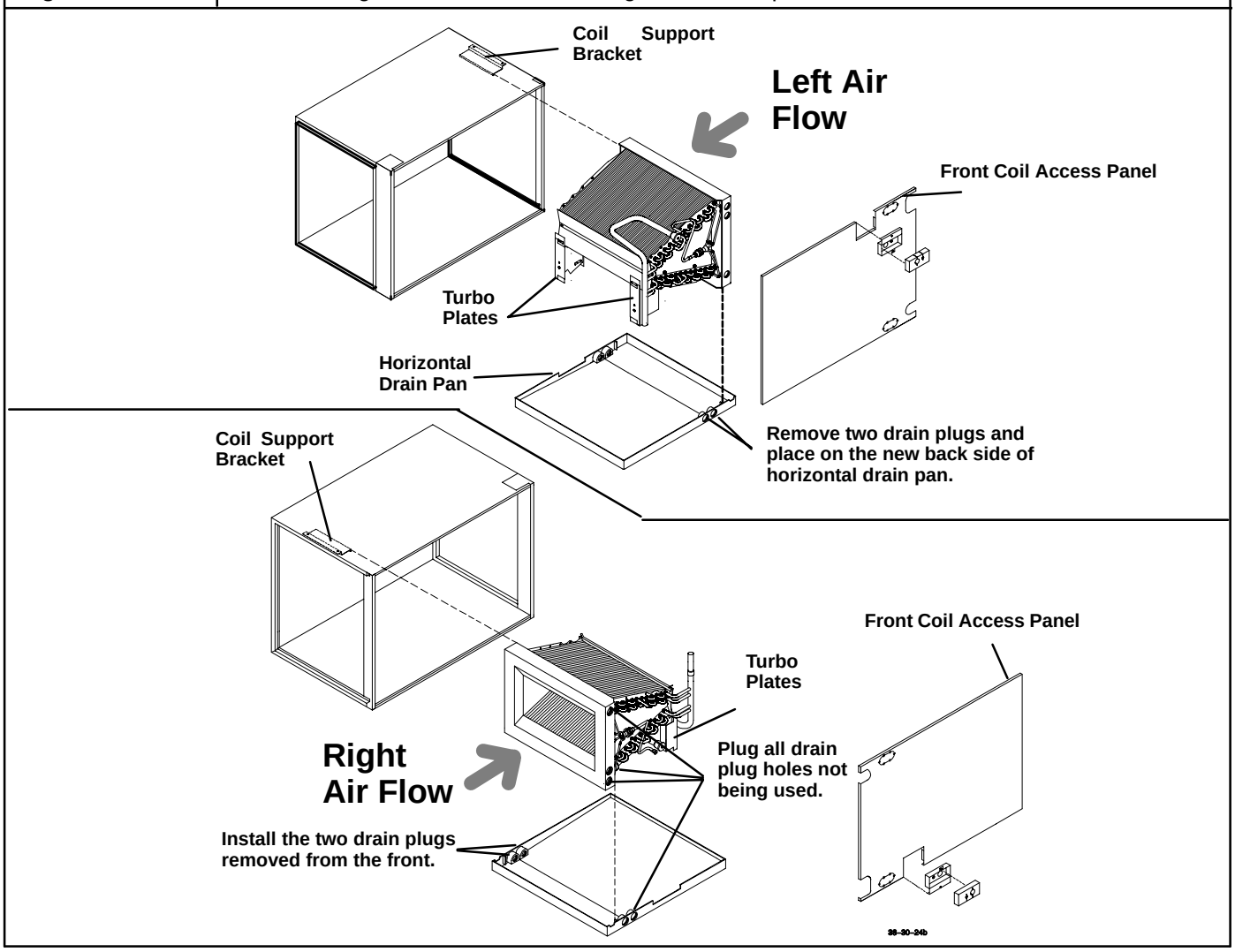

Condensate Drain

The unit is provided with 3/4” National Pipe Thread (NPT) condensate drains. Any drain can be used as a primary or secondary drain. Condensate drain lines should be installed in a manner that does not obstruct access to the filter.

There is a secondary drain fitting supplied with the unit that will convert any of the primary condensate drain connections into a secondary drain connection. This fitting should be installed in any of the primary drain connections to convert it to a secondary drain.

NOTE: For downflow electric furnace the secondary overflow drain connection must be installed to prevent possible water from dripping onto live electrical components.

1. Connect the drain lines to the appropriate drain fittings. The drain line should not be smaller than the drain fitting.
2. Install a trap* in the drain line below the bottom of the drain pan and pitch the drain lines down from the coil at least l/4” per foot of run. Horizontal runs over 15 feet long must also have an anti–siphon air vent (stand pipe), installed ahead of the horizontal run. An extremely long horizontal run may require an oversized drain line to eliminate air trapping.

NOTE*

A trap must be used when the coil is installed on the return air side of the system. When coil is installed on the supply side (outlet air) it is not necessary to install a trap and better drainage is usually achieved without the trap.

3. Route to the outside or to a floor drain. Check local codes before connecting to a sewer line.
4. Insulate drain lines where sweating could cause water damage.
5. If a gravity drain cannot be used, install a condensate pump. Install the pump as close to the indoor section as possible.

Figure 3 **Condensate Drain Fittings**

Waste Line Connection

WARNING

Danger Of Explosion.

Failure To Provide Trap Can Result In Bodily Injury Or Death.

Provide Trap With Air Gap In Drain Line When Connected To Sewer Line.

If the condensate line is to be connected to a waste line, an open trap must be installed ahead of the waste line to prevent escape of sewer gases. NEVER CONNECT THE DRAIN LINE DIRECTLY TO A WASTE LINE. ALWAYS INCLUDE AN AIR GAP AND TRAP**, (Figure 4)**. Be sure to keep the trap filled with water during the winter or off season.

Figure 4 | **Condensate Drain to Waste Line**

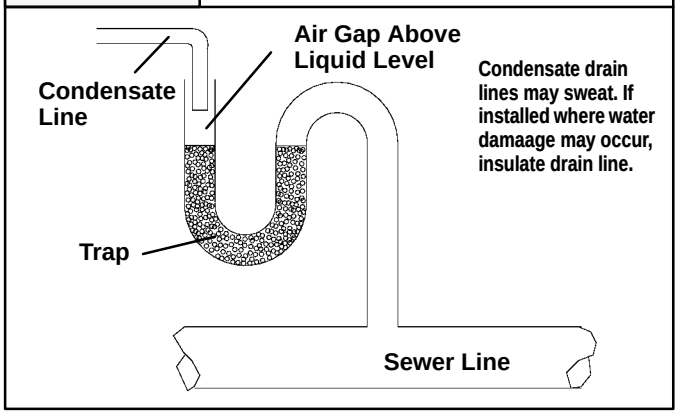

Restrictor Orifice Selection

A restrictor orifice is located in a fitting at the distributor. The factory installed restrictor orifice is identified on the unit rating plate.

The restrictor orifice may require changing to obtain best performance. Refer to the restrictor charts furnished with the outdoor unit.

Changing Restrictor Orifice

1. Remove the liquid line fitting and replace restrictor orifice. **(STANDARD RIGHT HAND THREAD**)
2. Make sure the restrictor is installed with the rounded end toward the feeder tubes. **See Figure 5.**

Figure 5 | **Restrictor Orifice**

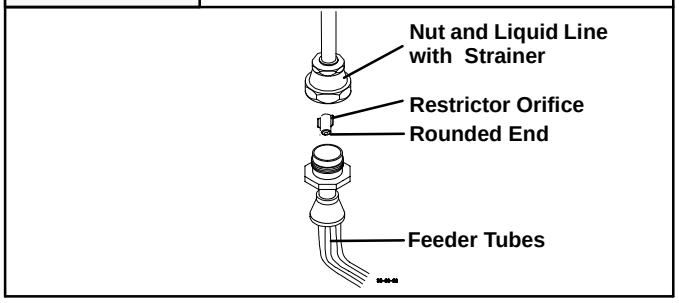

Refrigerant Line Connections

Size refrigerant lines according to information provided with outdoor condensing unit. Route the refrigerant lines to the coil in a manner that will not obstruct service access to the unit or removal of the filter.

1. Remove rubber plugs from refrigerant connections using a pulling and twisting motion. Hold refrigerant lines to avoid bending or distorting.
2. Remove the coil door before brazing refrigerant connections to prevent damage to paint finish.
3. Fit refrigerant lines into coil connections and remove the tubing plate and slide plate over the refrigerant lines to assure sufficient room for brazing.
4. Reinstall tubing plate and door and install the gasket, provided with the unit, over the suction and liquid lines into the tubing plate recess to ensure an air seal around the coil. **See Figure 6**.

Figure 6 | **Refrigerant Lines**

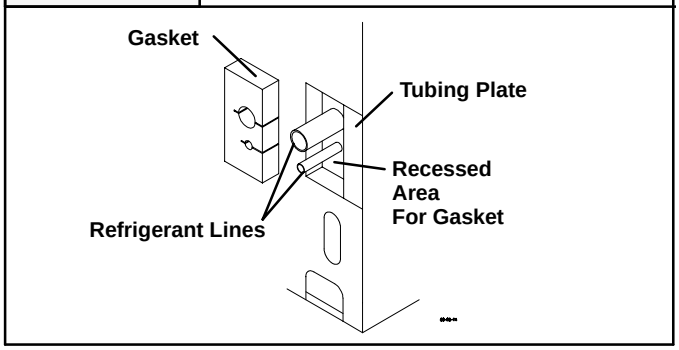

Securing Coil Cabinet

If coil cabinet was shipped with 2 loose flat brackets they may be used to secure the coil cabinet to either the furnace or blower cabinet. Use one on each side being careful to place screws so they do not puncture any tubing, drain pan or other functional area.

Check and Adjust Air Flow

Check Pressure Drop Across Coil

It is important that the right amount of air flows through the coil. The amount is related to a pressure drop. To check the air flow, measure the pressure drop using an inclined manometer (sometimes called draft gauge or air flow gauge).

Checking Static Drop Across Coil

1. **The coil should be dry and clean. The air filter must be clean and all registers open.** DO NOT run the condensing unit when checking air flow.
2. Run the Blower on cooling speed.
3. Set the blower motor speed–belt drive or direct drive to the nominal CFM required across coil and the dry coil static reading. **See Figure 6.**

Adjusting Air Flow

If the gauge reading is below the required pressure, increase the blower speed until reading is the same or slightly above the required pressure. If the gauge reading is much above the required pressure decrease the blower speed. Change speed as shown in the instruction for your furnace or modular blower.

NOTE: You may not be able to obtain a gauge reading exactly the same as the required pressure. This is due to variations in duct systems and blower speeds.

If your reading is the same or slightly higher, you will be all right. Too little air will cause a freeze up. This will shorten compressor life. Too much air will result in poor humidity control and over– heating of the compressor. It may cause tripping of the compressor overload. Too much air on horizontal applications may result in water blowing off the coil into the duct work.

It you cannot get a reading as high as the required pressure at the highest speed, replace the blower and/ or motor with a larger size.

It you are adjusting a belt driven blower, use an ammeter to check the motor current draw. It the current draw is higher than the motor name plate amps, replace the motor with one of greater horse power.

Figure 7

Coil	Required CFM Across Coil	Static Pressure Drop (Inches W.C.)			
		ELA		ELD	
		Dry	Wet	Dry	Wet
EL*18B	400	.06	.08	-	-
	500	.09	.12	-	-
	600	.13	.16	-	-
	700	.18	.20	-	-
	900	.28	.32	-	-
EL*24B	600	.11	.12	.12	.13
	700	.14	.15	.17	.18
	800	.18	.19	.20	.22
	900	.23	.23	.25	.28
	1000	.27	.29	.30	.34
EL*30B	800	.18	.22	.20	.23
	900	.22	.27	.26	.29
	1000	.28	.33	.30	.35
	1100	.33	.39	.36	.43
	1200	.39	.46	.42	.50
EL*36B	800	.18	.20	.19	.22
	900	.22	.24	.24	.29
	1000	.27	.30	.29	.34
	1100	.32	.37	.35	.40
	1200	.37	.44	.42	.47
	1300	.43	.50	.48	.55
	1400	.50	.59	.55	.63
EL*36F	1000	.19	.21	.19	.23
	1100	.21	.24	.22	.27
	1200	.25	.28	.25	.31
	1300	.29	.33	.29	.35
	1400	.33	.37	.34	.40
EL*42F	1000	.21	.27	.22	.27
	1100	.25	.32	.26	.33
	1200	.29	.37	.30	.38
	1300	.33	.43	.35	.44
	1400	.33	.49	.40	.50
EL*48F	1000	.20	.25	.20	.25
	1100	.23	.29	.25	.30
	1200	.27	.35	.28	.36
	1300	.32	.40	.34	.41
	1400	.36	.46	.38	.49
	1500	.41	.52	.43	.53
	1600	.47	.58	.50	.60
EL*60J	1300	.16	.19	.21	.25
	1400	.18	.21	.24	.29
	1500	.21	.26	.27	.33
	1600	.28	.29	.30	.37
	1700	.26	.34	.33	.41
	1800	.30	.38	.37	.46
	1900	.34	.43	.40	.51

KEY NO.	DESCRIPTION	PART NUMBER	ELA18B15A1	ELA24B15A1	ELA24B15A2	ELA30B15A1	ELA30B15A2	ELA36B15A1	ELA36F19A1	ELA42F19A1	ELA48F19A1	ELA60J22A1
3	Housing, Flow Control	1082972	1	1	1	1	1	1	1			
3		1082973								1	1	1
4	Restrictor, .051	1053110	1									
4	.057	1085975										
4	.059	1055236		1	1							
4	.065	1093424				1	1					
4	.072	1069387						1	1			
4	.078	1053112								1		
4	.079	1053661									1	
4	.090	1053663										1
5	Adapter, Flow Control	1082860	1	1	1	1	1	1				
5	w ith Liquid Tube	1082864										
5		1082959							1			
5		1082862								1	1	
5		1082857										1
5		1082966										
6	Distributor Assembly	Not Stocked	0	0	0	0	0	0	0	0	0	0
C	Plug, Drain Pan	1083241	2	2	2	2	2	2	2	2	2	2
D	Plug, Drain Pan	1082965	1	1	1	1	1	1	1	1	1	1
)(	Adapter, Male	1085010	1	1	1	1	1	1	1	1	1	1

KEY NO.	DESCRIPTION	PART NUMBER	ELD18B15A1	ELD24B15A1	ELD30B15A1	ELD36B15A1	ELD36F19A1	ELD42F19A1	ELD48F19A1	ELD60J22A1
3	Housing, Flow Control	1082972	1	1	1	1	1			
3		1082973						1	1	1
4	Restrictor, .051	1053110	1							
4	.057	1085975		1						
4	.065	1093424			1					
4	.073	1054027				1	1			
4	.078	1053112						1		
4	.079	1053661							1	
4	.092	1053712								1
5	Adapter, Flow Control	1082860	1	1	1	1				
5	w ith Liquid Tube	1082864								
5		1082959					1			
5		1082862						1	1	
5		1082857								1
5		1082966								
6	Distributor Assembly	Not Stocked	0	0	0	0	0	0	0	0
C	Plug, Drain Pan	1083241	2	2	2	2	2	2	2	2
D	Plug, Drain Pan	1082965	1	1	1	1	1	1	1	1
)(	Adapter, Male	1085010	1	1	1	1	1	1	1	1
J	Panel,Door	1087831	1							
J		1087836		1	1					
J		1087834				1				
J		1087835					1			
J		1087824							1	
J		1087826								1